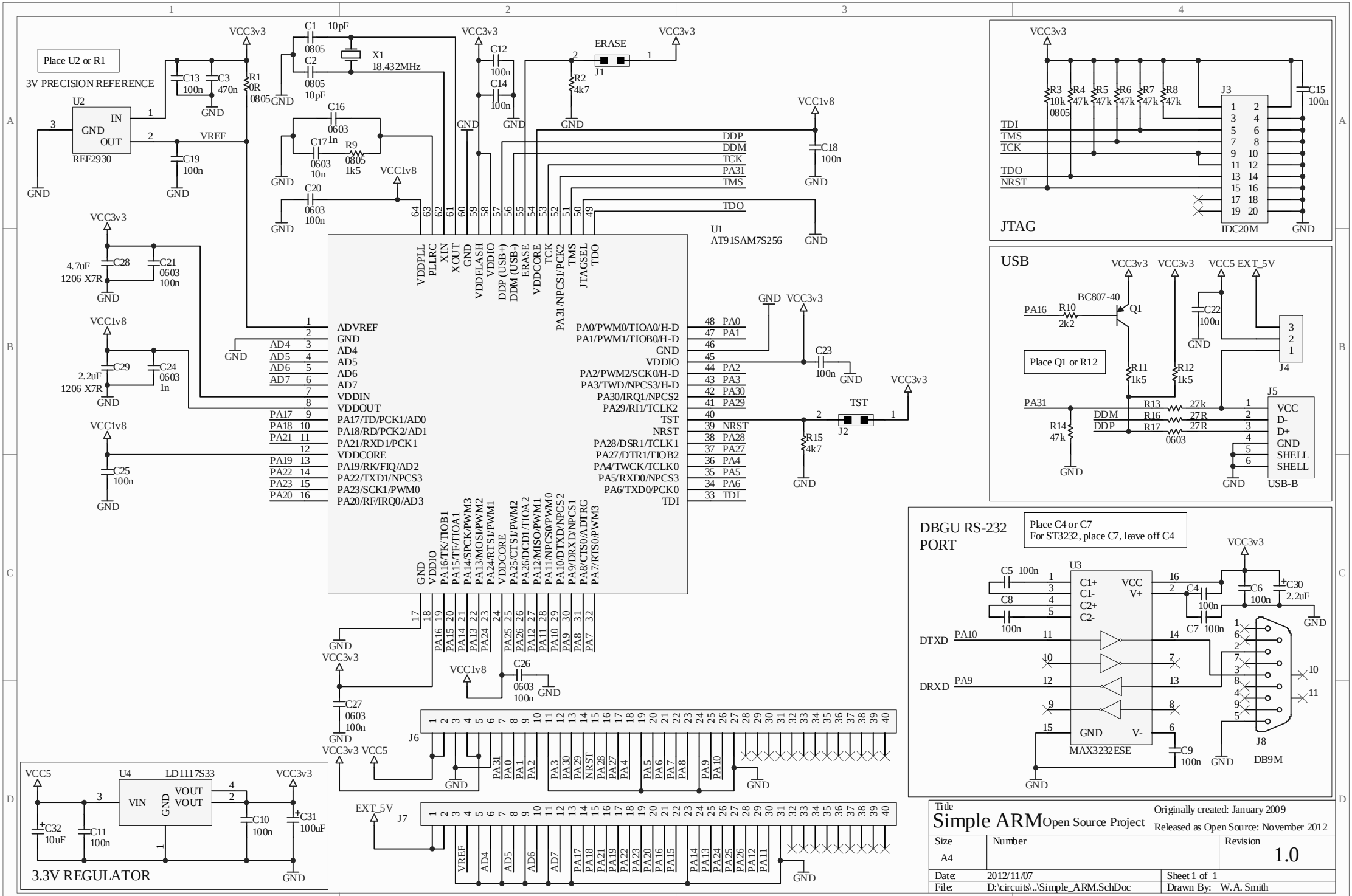

Title		
Simple ARM Open Source Project	Originally created: January 2009 Released as Open Source: November 2012	
Size: A4	Number	Revision: 1.0
Date: 2012/11/07	Sheet 1 of 1	
File: D:\circuits\..\Simple_ARM.SchDoc	Drawn By: W.A. Smith	