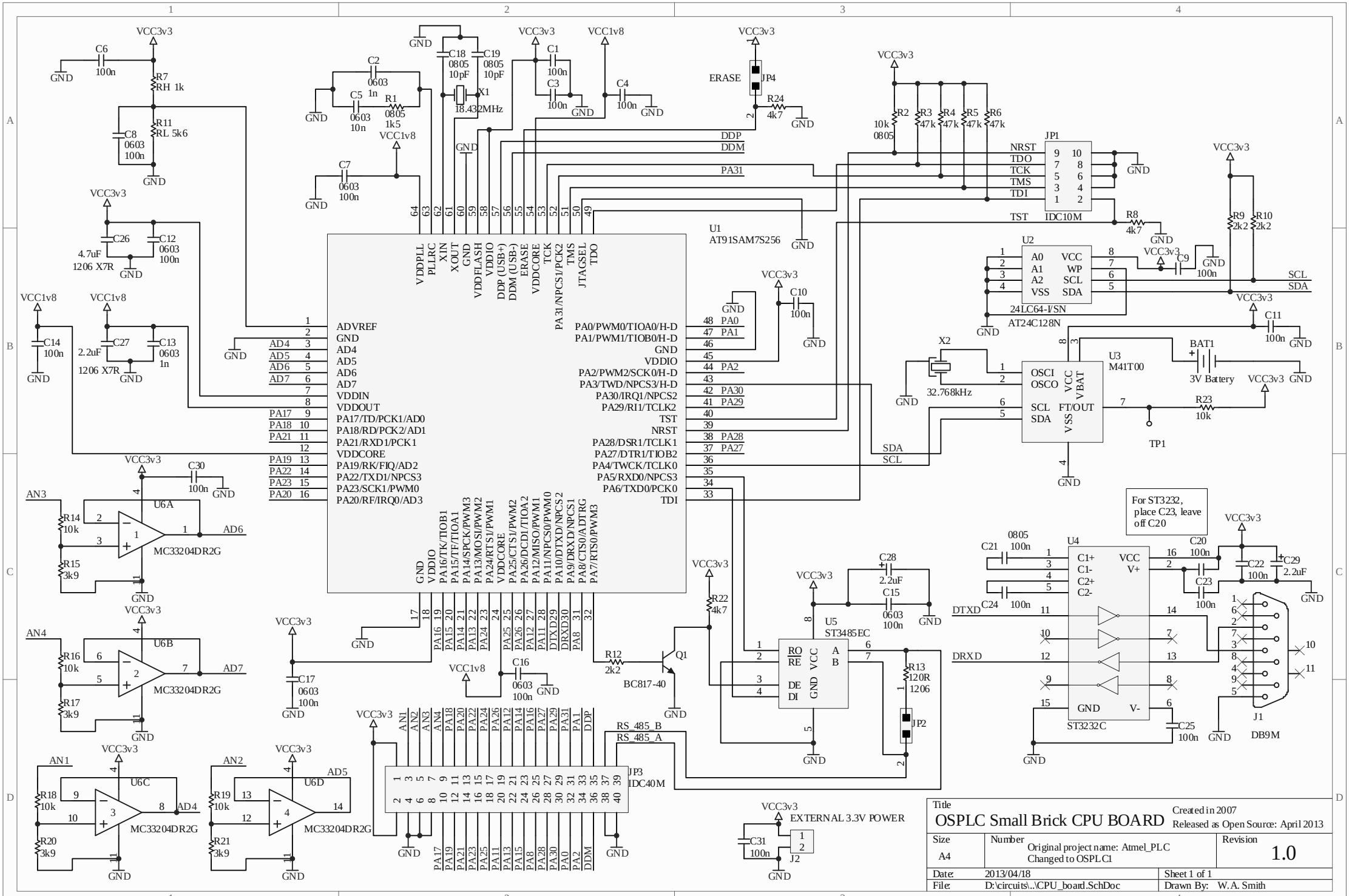
U1
AT91SAM7S256
U2
24LC64-I/SN
AT24C128N
U3
M41T00
U4
ST3232C
U5
ST3485EC
U6A
U6B
U6C
U6D
MC33204DR2G
JP1
IDC10M
JP3
IDC40M
J1
DB9M
J2
EXTERNAL 3.3V POWER
BAT1
3V Battery
X1
18.432MHz
X2
32.768kHz
Q1
BC817-40
TP1
For ST3232, place C23, leave off C20
Title
OSPLC Small Brick CPU BOARD
Created in 2007
Released as Open Source: April 2013
Size
A4
Number
Original project name: Atmel_PLC
Changed to OSPLC1
Revision
1.0
Date: 2013/04/18
Sheet 1 of 1
File: D:\circuits\..\CPU_board.SchDoc
Drawn By: W.A. Smith